DK-LOK Valves

V82 Series Ball Valves

No.V82-7
August 2015

Pressure Rating up to 3,000psig

Features of V82 Series

V82 series Ball valves are classified into 3 types according to the temperature range in use. V82 series is for general use and VL82 is adequate to the low temperature range. VG82 can be used in the widen temperature range from low to high temperature. The exact temperature range of each type is referred to the technical data of the type.

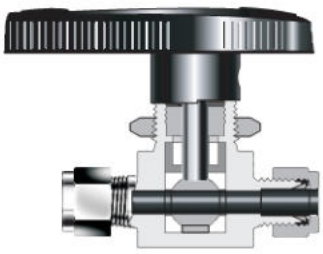

- Sealing is achieved without system pressure
- Bi-directional flow
- Pressure up to 3000 psig (206 bar)
- Lowest dead space design
- Nylon Directional handle - indicates the flow through the valve.
- Panel mounting nut - is standard and permits valve to panel or actuator.
- Top-loaded packing - allows packing adjustment with the valve in-line.
- Capsule packing - fills voids in the valve body and prevents fluid entrapment.
  - allows lowest dead space.
- Support rings and discs - retains the capsule packing and prevent cold flow.
- Integral ball stem - machined from single piece bar stock.
  - eliminates the backlash during handle actuation.
- One-piece body - reduces the number of potential leak points.

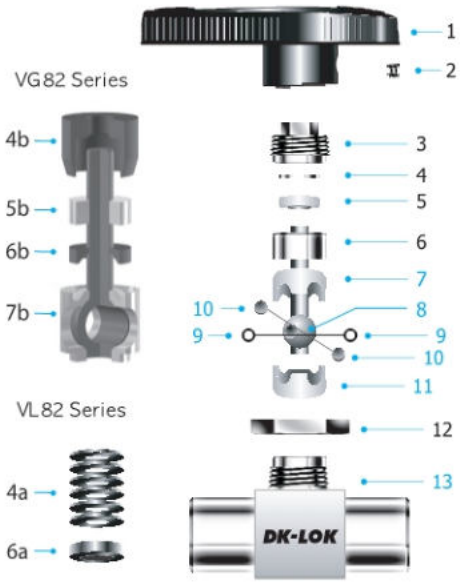

Materials of Construction

Component	Valve Body Materials	
	Stainless Steel	Brass
	Grade/ASTM Specification	
1. Handle	Nylon with brass insert	
2. Set Screw	stainless steel 304	
3. Packing bolt *	SS316/A276 or A479	Brass C3604
4. Upper Gland	SS316/A276 or A479	
4a. Packing Spring (VL82 series)	17-4PH/A693	
4b. Gland (VG82 series)	SS316/A276 or A479	
5. Bushing	PTFE/D1710 type 1, Grade 1, Class B	
5b. Packing (VG82 series)	PTFE/D1710 type 1, Grade 1, Class B	
6. Lower gland	SS316/A276	Brass C3604
6a. Packing Gland (VL82 series)	SS316/A276	
6b. Lower Gland (VG82 series)	SS316/A276	Brass C3604
7 & 11. Upper & Lower Packing	PTFE/D1710 type 1	
7b. Integrated Seat (VG82 series)	PFA	
8. Ball stem	SS316/A276	
9. Support rings	SS316 powered metal/B783 (fluorocarbon coating)	
10. Side discs		
12. Panel nut	SS316/A276	Brass C3604
13. Body	SS316/A276 or A479	

* Molybdenum disulfide with hydrocarbon coating.

- Note : 1. Wetted parts and lubricants are listed in blue.
  2. Lubricant is Fluorinated-based. Lubricants are available for a specific application.

Operation & Packing Adjustment

- V82 valves are designed to control fluid in full open and closed position; using V82 valves to throttle the flow may reduce the valve life.
- Valves that have not been actuated for a period of time may have a higher initial actuation torque.
- Every valve working pressure is adjusted for factory test at 1,000 psig (68.9 bar) @ 21°C (70°F). For use in higher pressure or lower temperature range, the valve packing may be required for re-adjustment.
- Packing adjustment may be required during the valve in service.

Application

- Analytical market requiring a valve with lowest dead volume to prevent fluid entrapment which can cause contamination.
- Control Sampling Systems, and Process Instrumentation market requiring a valve with compact size, high flow capacity and directional indication of flow.

Factory Test and Packaging

- Every valve is factory tested with nitrogen gas at 1,000 psig (68.9 bar) for leakage at seat to a maximum allowable leak rate of 0.1 SCCM.The packing is tested with nitrogen gas for no detectable leakage.
- Every valve is cleaned and packaged in accordance with DK cleaning standard DC-01

2-way On-off Valves

■ In-line pattern

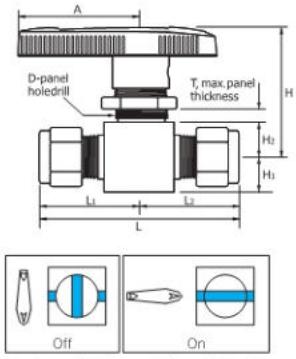

① min.panel thickness : 3.2mm(1/8inch)

■ Angle pattern

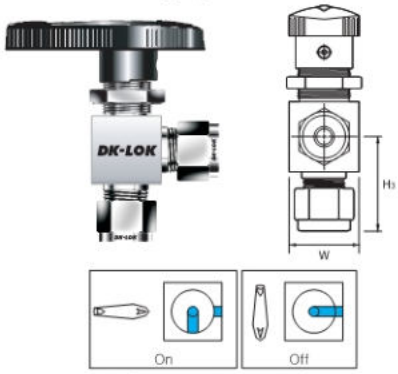

Ordering designator: -A

■ Botton mounting option (In-line Only)

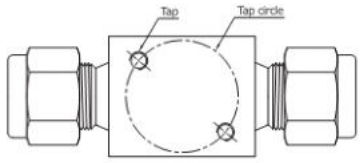

Size	Tap	Tap Depth	Tap circle
V82C	M5x0.8P	5.0 mm (0.2 in.)	Ø28.7 mm (1.13 in..)
V82D			Ø38.1 mm (1.5 in..)

Ordering designator: -TM

Technical Data for V82 Series with Standard PTFE Seat

Valve Series		Working Pressure		Temp. Range
In-line	Angle	psig	bar	
V82A, V82C, V82D	V82A-A, V82B-A	2500	172	10°C to 65°C 50°F to 150°F
V82B	-	3000	206	
-	V82C-A, V82D-A	1500	103	

Technical Data for VL82 Series with Standard PFA Seat

Valve Series		Working Pressure		Temp. Range
In-line	Angle	psig	bar	
VL82A, VL82C, VL82D	VL82A-A, VL82B-A	2500	172	-54°C to 65°C -65°F to 150°F
VL82B	-	3000	206	
-	VL82C-A, VL82D-A	1500	103	

Technical Data for VG82 Series with Integrated PFA Seat

Valve Series		Working Pressure		Temp. Range
In-line	Angle	psig	bar	
VG82A, VG82C, VG82D	VG82A-A, VG82B-A	2500	172	-54°C to 150°C -65°F to 302°F
VG82B	-	3000	206	
-	VG82C-A, VG82D-A	1500	103	

Ordering Information and Table of Dimensions

Basic Ordering Number		End Connections		Orifice		Cv		Dimensions mm (in.)											
		Inlet	Outlet	mm	in.	Inline	Angle	L	L1	L2	H3	H2	H1	A	T①	D	H	W
V82A-(VG82A)	D1T-	1/16"	DK-Lok	1.3	0.052	0.1	-	42.7(1.68)	21.3(0.84)	21.3(0.84)	-	8.6(0.34)	7.1(0.28)	28.4(1.12)	6.4(1/4)	15.1(19/32)	34.5(1.36)	14.7(0.58)
	D2T-	1/8"	DK-Lok	2.4	0.093	0.2	0.15	51.1(2.01)	25.7(1.01)	25.7(1.01)	24.6(0.97)	8.6(0.34)	7.1(0.28)	28.4(1.12)	6.4(1/4)	15.1(19/32)	34.5(1.36)	14.7(0.58)
	D3M-	3mm	DK-Lok	2.4	0.093	0.2	0.15	51.1(2.01)	25.7(1.01)	25.7(1.01)	24.6(0.97)	8.6(0.34)	7.1(0.28)	28.4(1.12)	6.4(1/4)	15.1(19/32)	34.5(1.36)	14.7(0.58)
	D4T-	1/4"	DK-Lok	3.2	0.125	0.6	0.35	56.1(2.21)	27.9(1.10)	27.9(1.10)	27.2(1.07)	8.6(0.34)	7.1(0.28)	28.4(1.12)	6.4(1/4)	15.1(19/32)	34.5(1.36)	14.7(0.58)
	D6M-	6mm	DK-Lok	3.2	0.125	0.6	0.35	56.1(2.21)	27.9(1.10)	27.9(1.10)	27.2(1.07)	8.6(0.34)	7.1(0.28)	28.4(1.12)	6.4(1/4)	15.1(19.32)	34.5(1.36)	14.7(0.58)
	F2N-	1/8"	Female NPT	3.2	0.125	0.5	0.3	41.1(1.62)	20.6(0.81)	20.6(0.81)	20.6(0.81)	8.6(0.34)	7.1(0.28)	28.4(1.12)	6.4(1/4)	15.1(19/32)	34.5(1.36)	14.7(0.58)
V82B-(VG82B)	D4T-	1/4"	DK-Lok	4.8	0.187	1.4	0.9	59.9(2.36)	30.0(1.18)	30.0(1.18)	29.7(1.17)	11.2(0.44)	9.7(0.38)	38.9(1.53)	4.8(3/16)	19.8(25/32)	39.6(1.56)	19.8(0.78)
	D6T-	3/8"	DK-Lok	4.8	0.187	1.5	0.9	65.5(2.58)	32.8(1.29)	32.8(1.29)	32.8(1.29)	11.2(0.44)	9.7(0.38)	38.9(1.53)	4.8(3/16)	19.8(25/32)	39.6(1.56)	19.8(0.78)
	D6M-	6mm	DK-Lok	4.8	0.187	1.4	0.9	60.7(2.39)	30.5(1.20)	30.5(1.20)	29.7(1.17)	11.2(0.44)	9.7(0.38)	38.9(1.53)	4.8(3/16)	19.8(25/32)	39.6(1.56)	19.8(0.78)
	D8M-	8mm	DK-Lok	4.8	0.187	1.5	0.9	62.5(2.46)	31.2(1.23)	31.2(1.23)	30.5(1.20)	11.2(0.44)	9.7(0.38)	38.9(1.53)	4.8(3/16)	19.8(25/32)	39.6(1.56)	19.8(0.78)
	F2N-	1/8"	Female NPT	4.8	0.187	1.2	0.7	50.8(2.00)	25.4(1.00)	25.4(1.00)	25.4(1.00)	11.2(0.44)	9.7(0.38)	38.9(1.53)	4.8(3/16)	19.8(25/32)	39.6(1.56)	19.8(0.78)
	F4N-	1/4"	Female NPT	4.8	0.187	0.9	0.75	52.3(2.06)	26.2(1.03)	26.2(1.03)	26.2(1.03)	11.2(0.44)	9.7(0.38)	38.9(1.53)	4.8(3/16)	19.8(25/32)	39.6(1.56)	19.8(0.78)
	M4N-	1/4"	Male NPT	4.8	0.187	1.2	0.75	50.8(2.00)	25.4(1.00)	25.4(1.00)	26.2(1.03)	11.2(0.44)	9.7(0.38)	38.9(1.53)	4.8(3/16)	19.8(25/32)	39.6(1.56)	19.8(0.78)
	F4R-	1/4"	ISO Female Tapered	4.8	0.187	0.9	-	52.3(2.06)	26.2(1.03)	26.2(1.03)	-	11.2(0.44)	9.7(0.38)	38.9(1.53)	4.8(3/16)	19.8(25/32)	39.6(1.56)	19.8(0.78)
V82C	D6T-	3/8"	DK-Lok	7.1	0.281	6.0	2.0	77.5(3.05)	38.6(1.52)	38.6(1.52)	38.2(1.5)	14.2(0.56)	14.2(0.56)	50.8(2.00)	9.5(3/8)	28.6(1-1/8)	52.6(2.07)	28.4(1.12)
	D10M-	10mm	DK-Lok	7.1	0.281	6.0	2.0	78.0(3.07)	38.9(1.53)	38.9(1.53)	39(1.53)	14.2(0.56)	14.2(0.56)	50.8(2.00)	9.5(3/8)	28.6(1-1/8)	52.6(2.07)	28.4(1.12)
	F4N-	1/4"	Female NPT	7.1	0.281	3.0	1.7	63.5(2.50)	31.8(1.25)	31.8(1.25)	31.8(1.25)	14.2(0.56)	14.2(0.56)	50.8(2.00)	9.5(3/8)	28.6(1-1/8)	52.6(2.07)	28.4(1.12)
	F6N-	3/8"	Female NPT	7.1	0.281	2.6	1.5	63.5(2.50)	31.8(1.25)	31.8(1.25)	31.8(1.25)	14.2(0.56)	14.2(0.56)	50.8(2.00)	9.5(3/8)	28.6(1-1/8)	52.6(2.07)	28.4(1.12)
	F6R-	3/8"	ISO Female Tapered	7.1	0.281	2.6	-	63.5(2.50)	31.8(1.25)	31.8(1.25)	-	14.2(0.56)	14.2(0.56)	50.8(2.00)	9.5(3/8)	28.6(1-1/8)	52.6(2.07)	28.4(1.12)
V82D-	D8T-	1/2"	DK-Lok	10.3	0.406	12.0	4.6	99.6(3.92)	49.8(1.96)	49.8(1.96)	49.8(1.96)	17.5(0.69)	17.5(0.69)	76.2(3.00)	9.5(3/8)	38.1(1-1/2)	66.3(2.61)	38.1(1.50)
	D12T-	3/4"	DK-Lok	10.3	0.406	6.4	3.8	99.6(3.92)	49.8(1.96)	49.8(1.96)	49.5(1.94)	17.5(0.69)	17.5(0.69)	76.2(3.00)	9.5(3/8)	38.1(1-1/2)	66.3(2.61)	38.1(1.50)
	D12M-	12mm	DK-Lok	9.5	0.375	12.0	4.6	99.6(3.92)	49.8(1.96)	49.8(1.96)	48.7(1.91)	17.5(0.69)	17.5(0.69)	76.2(3.00)	9.5(3/8)	38.1(1-1/2)	66.3(2.61)	38.1(1.50)
	F8N-	1/2"	Female NPT	10.3	0.406	6.3	3.5	79.2(3.12)	39.6(1.56)	39.6(1.56)	39.6(1.56)	17.5(0.69)	17.5(0.69)	76.2(3.00)	9.5(3/8)	38.1(1-1/2)	66.3(2.61)	38.1(1.50)
	F8R-	1/2"	ISO Female Tapered	10.3	0.406	6.3	-	79.2(3.12)	39.6(1.56)	39.6(1.56)	-	17.5(0.69)	17.5(0.69)	76.2(3.00)	9.5(3/8)	38.1(1-1/2)	66.3(2.61)	38.1(1.50)

All dimensions shown are for reference only and are subject to change. Dimensions with DK-Lok nuts are in finger-tight position.

Patterns: To order angle pattern, use -A as a suffix to the basic ordering number. Example: V82B-D-4T-A-S

Top mounting: To order Top mounting option, use -TM as a suffix to the basic ordering number. Example: V82C-D-6T-TM-S

© Copyright 2001-2015. All Rights Reserved. DK-LOK Corporation

3-way Switching Valves

Technical Data for V82 Series with Standard PTFE Seat

Valve Series 3-way	Working Pressure psig	Working Pressure bar	Temp. Range
V823A, V823B	2500	172	10°C to 65°C
V823C, V823D	1500	103	50°F to 150°F

Technical Data for VL82 Series with Standard PFA Seat

Valve Series 3-way	Working Pressure psig	Working Pressure bar	Temp. Range
VL823A, VL823B	2500	172	-54°C to 65°C
VL823C, VL823D	1500	103	-65°F to 150°F

Technical Data for VG82 Series with Integrated PFA Seat

Valve Series 3-way	Working Pressure psig	Working Pressure bar	Temp. Range
VG823A, VG823B	2500	172	-54°C to 150°C
VG823C, VG823D	1500	103	-65°F to 302°F

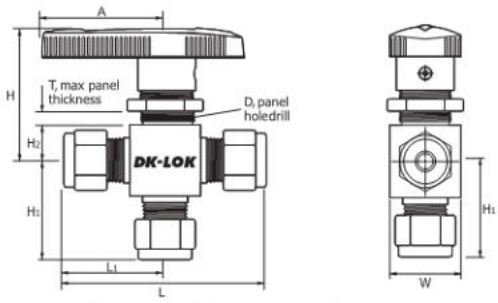

① min.panel thickness : 3.2mm(1/8inch)

Ordering Information and Table of Dimensions

Basic Ordering Number		End Connections Inlet	End Connections Outlet	Orifice mm	Orifice in.	Cv	Dimensions mm (in.) L	L1	H1	H2	A	T①	D	H	W
V823A-(VG823A)	D1T-	1/16" DK-Lok		1.3	0.052	0.1	42.7(1.68)	21.3(0.84)	20.6(0.81)	8.6(0.34)	28.7(1.13)	6.4(1/4)	15.0(19/32)	34.5(1.36)	14.7(0.58)
	D2T-	1/8" DK-Lok		2.4	0.093	0.2	51.1(2.01)	25.7(1.01)	24.6(0.97)	8.6(0.34)	28.7(1.13)	6.4(1/4)	15.0(19/32)	34.5(1.36)	14.7(0.58)
	D3M-	3mm DK-Lok		2.4	0.093	0.2	56.1(2.21)	27.9(1.10)	27.2(1.07)	8.6(0.34)	28.7(1.13)	6.4(1/4)	15.0(19/32)	34.5(1.36)	14.7(0.58)
	D4T-	1/4" DK-Lok		3.2	0.125	0.6	51.1(2.01)	25.7(1.01)	24.6(0.97)	8.6(0.34)	28.7(1.13)	6.4(1/4)	15.0(19/32)	34.5(1.36)	14.7(0.58)
	D6M-	6mm DK-Lok		3.2	0.125	0.6	56.1(2.21)	27.9(1.10)	27.2(1.07)	8.6(0.34)	28.7(1.13)	6.4(1/4)	15.0(19/32)	34.5(1.36)	14.7(0.58)
	F2N-	1/8" Female NPT		3.2	0.125	0.5	41.4(1.63)	20.6(0.81)	20.6(0.81)	8.6(0.34)	28.7(1.13)	6.4(1/4)	15.0(19/32)	34.5(1.36)	14.7(0.58)
V823B-(VG823B)	D4T-	1/4" DK-Lok		4.8	0.187	1.4	60.7(2.39)	30.5(1.20)	29.7(1.17)	11.2(0.44)	38.9(1.53)	4.8(3/16)	19.8(25/32)	39.6(1.56)	19.8(0.78)
	D6M-	6mm DK-Lok		4.8	0.187	1.4	60.7(2.39)	30.5(1.20)	29.7(1.17)	11.2(0.44)	38.9(1.53)	4.8(3/16)	19.8(25/32)	39.6(1.56)	19.8(0.78)
	D8M-	8mm DK-Lok		4.8	0.187	1.5	62.5(2.46)	31.2(1.23)	30.5(1.20)	11.2(0.44)	38.9(1.53)	4.8(3/16)	19.8(25/32)	39.6(1.56)	19.8(0.78)
	F4N-	1/4" Female NPT		4.8	0.187	0.9	52.3(2.06)	26.2(1.03)	26.2(1.03)	11.2(0.44)	38.9(1.53)	4.8(3/16)	19.8(25/32)	39.6(1.56)	19.8(0.78)
	F4R-	1/4" ISO Female Tapered		4.8	0.187	0.9	52.3(2.06)	26.2(1.03)	26.2(1.03)	11.2(0.44)	38.9(1.53)	4.8(3/16)	19.8(25/32)	39.6(1.56)	19.8(0.78)
V823C	D6T-	3/8" DK-Lok		7.1	0.281	6.0	73.4(2.89)	36.8(1.45)	36.3(1.43)	14.2(0.56)	50.8(2.00)	9.7(3/8)	28.7(1-1/8)	52.6(2.07)	28.4(1.12)
	D10M-	10mm DK-Lok		7.1	0.281	6.0	78(3.07)	39(1.53)	39(1.53)	14.2(0.56)	50.8(2.00)	9.7(3/8)	28.7(1-1/8)	52.6(2.07)	28.4(1.12)
	F4N-	1/4" Female NPT		7.1	0.281	3.0	63.5(2.50)	31.8(1.25)	31.8(1.25)	14.2(0.56)	50.8(2.00)	9.7(3/8)	28.7(1-1/8)	52.6(2.07)	28.4(1.12)
	F6N-	3/8" Female NPT		7.1	0.281	2.6	63.5(2.50)	31.8(1.25)	31.8(1.25)	14.2(0.56)	50.8(2.00)	9.7(3/8)	28.7(1-1/8)	52.6(2.07)	28.4(1.12)
	F6R-	3/8" ISO Female Tapered		7.1	0.281	2.6	63.5(2.50)	31.8(1.25)	31.8(1.25)	14.2(0.56)	50.8(2.00)	9.7(3/8)	28.7(1-1/8)	52.6(2.07)	28.4(1.12)
V823D	D8T-	1/2" DK-Lok		10.3	0.406	12.0	88.4(3.48)	44.2(1.74)	44.2(1.74)	17.5(0.69)	76.2(3.00)	9.7(3/8)	38.1(1-1/2)	66.3(2.61)	38.1(1.50)
	D12T-	3/4" DK-Lok		10.3	0.406	6.4	88.4(3.48)	44.2(1.74)	44.2(1.74)	17.5(0.69)	76.2(3.00)	9.7(3/8)	38.1(1-1/2)	66.3(2.61)	38.1(1.50)
	D12M-	12mm DK-Lok		9.5	0.375	12.0	86.5(3.40)	43.2(1.70)	43.2(1.70)	17.5(0.69)	76.2(3.00)	9.7(3/8)	38.1(1-1/2)	66.3(2.61)	38.1(1.50)
	F8N-	1/2" Female NPT		10.3	0.406	6.3	79.5(3.13)	39.6(1.56)	39.6(1.56)	17.5(0.69)	76.2(3.00)	9.7(3/8)	38.1(1-1/2)	66.3(2.61)	38.1(1.50)
	F8R-	1/2" ISO Female Tapered		10.3	0.406	6.3	79.5(3.13)	39.6(1.56)	39.6(1.56)	17.5(0.69)	76.2(3.00)	9.7(3/8)	38.1(1-1/2)	66.3(2.61)	38.1(1.50)

All dimensions shown are for reference only and are subject to change. Dimensions with Dk-Lok nuts are in finger-tight position.

Flow Data

2-way

Cv	Water US GPM (L/min). @21°C (70°F) Pressure Drop to Atmosphere (Δp) psi (bar) 10(0.7)	50 (3.5)	100 (7.0)	Air SCFM (NL/min.) @21°C (70°F) 10 (0.7)	50 (3.5)	100 (7.0)
0.1	0.3(1.1)	0.7 (2.6)	1.0 (3.8)	1.1 (31)	3.0 (85)	5.3 (150)
0.2	0.6(2.3)	1.4 (5.3)	2.0 (7.6)	2.3 (76)	6.0 (215)	11.0 (396)
0.5	1.6 (5.7)	3.5 (13.2)	5.0 (18.9)	5.6 (195)	15.0 (538)	27.0 (963)
0.6	1.9 (7.2)	4.2 (15.9)	6.0 (22.7)	6.8 (235)	18.0 (651)	32.0 (1161)
0.9	2.8 (10.6)	6.4 (23.8)	9.0 (34.0)	10.0 (340)	27.0 (963)	48.0 (1720)
1.2	3.8 (14.0)	8.5 (31.8)	12.0 (45.4)	14.0 (481)	36.0 (1303)	64.0 (2294)
1.5	4.7 (17.8)	11.0 (41.6)	15.0 (56.8)	17.0 (595)	45.0 (1614)	80.0 (2832)
2.4	7.6 (28.4)	17.0 (64.3)	24.0 (90.8)	27.0 (935)	72.0 (2606)	120.0 (4531)
2.6	8.2 (31.0)	18.0 (68.1)	26.0 (98.4)	29.0 (1020)	78.0 (2804)	140.0 (5098)
3.0	9.5 (35.6)	21.2 (79.5)	30.0 (113.6)	34.0 (1189)	90.0 (3115)	160.0 (5664)
6.0	19.0 (71.9)	42.0 (159.0)	60.0 (227.1)	68.0 (2351)	180.0 (6514)	320.0 (11611)
6.3	19.9 (75.5)	44.5 (170.3)	63.0 (237.0)	71.0 (2464)	190.0 (6797)	340.0 (12178)
6.4	20.2 (75.7)	45.3 (170.3)	64.0 (242.2)	72.0 (2520)	190.0 (6797)	340.0 (12178)
12.0	37.9 (143.8)	84.9 (321.7)	120.0 (454.2)	130.0 (4814)	360.0 (13027)	640.0 (22939)

2-way angle pattern and 3-way

Cv	Water US GPM (L/min). @21°C (70°F) Pressure Drop to Atmosphere (Δp) psi (bar) 10(0.7)	50 (3.5)	100 (7.0)	Air SCFM (NL/min.) @21°C (70°F) 10 (0.7)	50 (3.5)	100 (7.0)
0.08	0.3 (1.1)	0.6 (2.3)	0.8 (3.0)	0.9 (26)	2.4 (68)	4.3 (122)
0.15	0.4 (1.5)	1.0 (3.8)	1.5 (5.7)	1.7 (57)	4.5 (161)	8.0 (286)
0.30	0.9 (3.4)	2.1 (7.9)	3.0 (11.4)	3.4 (116)	9.0 (312)	16.0 (566)
0.35	1.1 (4.2)	2.4 (9.1)	3.5 (13.2)	4.0 (136)	10.0 (368)	19.0 (680)
0.75	2.3 (8,7)	5.3 (20.1)	7.5 (28.4)	8.5 (283)	22.0 (821)	40.0 (1444)
0.80	2.5 (9.5)	5.6 (21.2)	8.0 (30.3)	9.0 (312)	24.0 (878)	42.0 (1529)
0.90	2.8 (10.6)	6.3 (23.8)	9.0 (34.1)	10.0 (340)	27.0 (963)	48.0 (1728)
1.5	4.7 (17.8)	11.0 (41.6)	15.0 (56.8)	17.0 (595)	45.0 (1614)	80.0 (2832)
1.7	5.3 (20.1)	12.0 (45.4)	17.0 (64.3)	19.0 (680)	51.0 (1841)	90.0 (3115)
2.0	6.3 (23.8)	14.0 (53.0)	20.0 (75.7)	22.0 (793)	60.0 (2181)	100.0 (3965)
3.5	11.0 (41.6)	25.0 (94.6)	35.0 (132.5)	39.0 (1359)	100.0 (3682)	180.0 (6797)
3.8	12.0 (45.4)	27.0 (102.2)	38.0 (143.8)	43.0 (1501)	110.0 (3965)	200.0 (7363)
4.6	15.0 (56.8)	33.0 (124.9)	46.0 (174.1)	52.0 (1812)	140.0 (5098)	240.0 (8779)

V824 Crossover 4-way Ball Valves

Features

- Crossover of two streams
- Mechanical stop ensures positive port positioning

Technical Data with standard PTFE, PFA and integrated PFA seat

Valve Series	Pressure Rating psig	Pressure Rating bar	SEAT material	Temperature Range
V824A	2500	172	PTFE	10°C to 65°C
V824B	1500	103		50°F to 150°F
VL824A	2500	172	PFA	-54°C to 65°C
VL824B	1500	103		-65°F to 150 °F
VG824A	2500	172	Integrated PFA	-54°C to 150°C
VG824B	1500	103		-65°F to 302°F

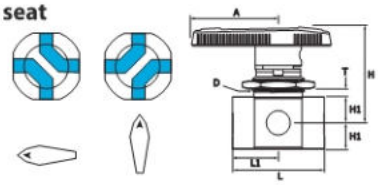

Ordering Information and Table of Dimensions

Ordering Number		End Connection	Cv	Orifice mm	Orifice in.	L	L1	H1	A	T*	D	H
V(L, G)824A-	F2N-S	1/8 in. Female NPT	0.08	1.6	0.062	39.4 (1.55)	19.8 (0.78)	11.2 (0.44)	38.9 (1.53)	4.8 (3/16)	23.1 (29/32)	42.7 (1.68)
V(L, G)824B-	F8N-S	1/2 in. Female NPT	1.6	7.1	0.281	79.5 (3.13)	39.6 (1.56)	17.5 (0.69)	76.2 (3.00)	9.7 (3/8)	38.1 (1 1/2)	61.7 (2.43)

T* indicates maximum panel thickness D : Panel Hole

V825 Switching 5-way Ball Valves

Features

- Flow switches from a single port to multiple ports or from multiple ports to a single port.
- Spring-loaded detent ensures exact port positioning.

Technical Data with standard PTFE, PFA and integrated PFA seat

Valve Series	Pressure Rating psig	Pressure Rating bar	SEAT material	Temperature Range
V825A	2500	172	PTFE	10°C to 65°C
V825B	1500	103		50°F to 150°F
VL825A	2500	172	PFA	-54°C to 65°C
VL825B	1500	103		-65°F to 150 °F
VG825A	2500	172	Integrated PFA	-54°C to 150°C
VG825B	1500	103		-65°F to 302°F

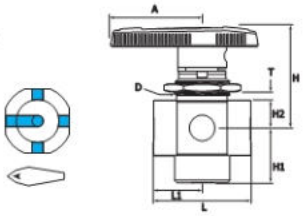

Ordering Information and Table of Dimensions

Ordering Number		End Connection	Cv	Orifice mm	Orifice in.	L	L1	H1	H2	A	T*	D	H
V(L, G)825A-	F2N-S	1/8 in. Female NPT	0.07	1.6	0.062	39.4 (1.94)	19.8 (0.78)	22.4 (0.88)	38.9 (1.53)	38.9 (1.53)	4.1 (5/32)	23.1 (29/32)	42.9 (1.69)
	F2G-S	1/8 in. ISO Parallel Threads											
V(L, G)825B-	F8N-S	1/2 in. Female NPT	3.5	10.3	0.406	79.5 (3.13)	39.6 (1.56)	17.5 (0.69)	76.2 (3.00)	76.2 (3.00)	9.7 (3/8)	38.1 (1 1/2)	61.7 (2.43)

T* indicates the maximum panel thickness. 3.2 mm (1/8 in.) minimum panel thickness. D : Panel Hole

Handle Options

Aluminum Bar
Add-AH to the valve ordering number.
Example:V824A-F-2N-AH-S

Stainless Bar
Add-BH to the valve ordering number.
Example:V824A-F-2N-BH-S

How to Order

Select applicable valve pattern, options and body material from designators listed below.

V824A-F2N
V82B-D4T
VG82A-D2T

-A -NL -AH -B -S

2-way	Botton mounting	Valve with no lubricant	Bar handle	Body material
A : 2-way angle pattern	**TM** : Botton mounting **Note** : Botton mounting option is applicable only to the in-line pattern 2-way valves.	**NL** : No lubricant Valve **Note** : Valve with no lubricant is factory tested at 200 psig (13 bar). This valve pressure rating is 200 psig (13 bar).	**Nil** : Standard Nylon handle **AH** : Aluminum bar handle **BH** : Stainless bar handle	**S** : SS316 **B** : Brass

Safe Valve Selection

The selection of a valve for any application or system design must be considered to ensure safe performance. Valve function, valve rating, material compatibility, proper installation, operation and maintenance remain the sole responsibillty of the system designer and the user. DK-Lok accepts no liability for any improper selection, installation, operation or maintenance.

DK-LOK® Fittings & Valves
www.dklok.com

DK-LOK Corporation
Mailing Address
7, Golden root-ro 129beon-gil, Juchon-myeon, Gimhae-si, Gyeongsangnam-do, South Korea 621-842

DK-Lok contact information
Tel. (82) 55-338-0114
Fax. (82) 55-901-0143
E-mail : sales@dklok.com

For International customers
Tel. (82) 55-338-0031/2
Fax. (82) 55-901-0142
E-mail : dklok@dklok.com